www.icgst.com

Wavelet and ICA Preprocessing for Ball Recognition in Soccer Images

M. Leo, T. D'Orazio, P. Spagnolo, A. Distante
Institute of Intelligent Systems for Automation
Via Amendola 122/D-I Bari, Italy
[leo, dorazio, spagnolo, distante]@issia.ba.cnr.it,
http://www.issia.cnr.it

Abstract
The ball detection in soccer images is one of the applications of the most general problem of object recognition, where the approach mainly used is based on classifying the pattern images after a suitable pre-processing. In this paper we have compared two different pre-processing techniques: the initial vectorial representation of the image has been projected both on the Haar basis and on the basis extracted from the Independent Component Analysis (ICA). The coefficients of the new representation in the ICA and Wavelet subspaces are supplied as input to a neural classifier. ICA and Wavelet representations have been chosen since they are well suited to increase the inter class differences and decrease the intra class ones. The experimental results on real soccer images show that the classification performances applying the ICA and Wavelet pre-processing techniques are quite the same and that combining ICA and Wavelet the percentage of pattern recognition can be further increased.

Keywords: *Wavelet Decomposition, Independent Component Analysis, Neural Networks, Feature Selection, Pattern Recognition*

1. Introduction
A large variety of fast and different algorithms for object detection and recognition has been studied during the last decade by the computer vision community. Object recognition and classification systems must be fast and stable in order to be applied in real time applications and to afford problems such as cluttered background, rotation, partial occlusion, scale variation and lighting change.
In this paper we are interested to recognize the ball in image sequences taken during soccer matches. Like the great part of similar applications, the problem can be divided into two distinct steps: firstly, a feature extraction procedure tries to select the correct features to represent as well as possible the object to recognize. Then, a specific classifier is trained and tested in order to perform the classification of the objects starting from the features previously selected.
The main characteristics of the particular applicative context led us to conclude that a statistical approach based on the Independent Component Analysis and Wavelet decomposition can be applied to perform the feature extraction for the ball recognition problem.
The ICA of multidimensional vector is a linear transform that minimizes the statistical dependence between its components. This representation in terms of independence has been proven useful to a number of applications such as data analysis and compression, blind source separation, blind deconvolution and denoising [1,2,16,18]. In the last years many researches have tried to demonstrate the possibility to apply the ICA in feature extraction. In particular ICA has been successfully applied by Bell[18] for the study of natural scenes, in [19] for face recognition and for general object recognition and classification in [20]. These works demonstrate that ICA is well suited for feature extraction since the coefficients maintain the most important information of the original representation. Wavelet are a mathematical tool to decompose hierarchically a function. They allow a function to be described in terms of a coarse overall shape, with details that range from broad to narrow. A number of works have been presented in literature that use the wavelet representation to achieve object detection [11,15, 23, 14, 22, 23].
In this paper a Back propagation neural network has been used to classify the feature vector extracted by Independent Component Analysis and Wavelet Transform. The main aim of this work is to compare the classification performances obtained using the ICA and Wavelet preprocessing to extract the features and then to evaluate the increase of performance obtained combining together the above techniques. A number of experiments have been carried out on real image sequences taken during a soccer match. The results have been evaluated also considering the computational load that each technique involves and the real benefits gained on the final performances.
The rest of the paper is organized as follows: Section 2 presents an overview of the related works; Section 3 introduces the Independent Component Analysis and the Multiresolution Wavelet Decomposition; Section 4

describes the system architecture and the experimental setup; Section 5 shows the classification results and finally in Section 6 conclusions are presented.

2. Related work

There are mainly three kinds of approaches to solve the object recognition problem: *template matching*, *statistical approaches* and *hierarchical approaches*.

The first approach is the simplest one. Matching is a generic operation in pattern recognition which is used to determine the similarity between two entities of the same type. In template matching the searched pattern is matched with stored templates which take into account all allowable poses (translation and rotation) and scale changes. Deformable template models[7] or rubber sheet deformations [8] can be used to match patterns when the deformations cannot be easily explained or modelled directly. This method has a number of disadvantages: it fails if the patterns are distorted due to the imaging process, view-point change, lighting changes or large intra-class variations among the patterns.

In order to overcome these problems different approaches based on statistical representations of the objects have been used. Each pattern is represented in terms of features or measurements and it is considered as a point in a multidimensional space. The effectiveness of the representation space is determined evaluating the separation among patterns from different classes [25,11].

Finally, in many recognition problems involving complex patterns hierarchical approaches have been applied: a pattern is viewed as being composed of simple sub-patterns which are themselves built from other simpler sub-pattern[9,10]. However, different methods to perform the features extraction in object recognition have also been used in literature. The most important are based on histogram equalization and parametric eigenspace decomposition [12,13,14,15].

The previous approaches have been evaluated for the specific context of ball recognition in image sequences taken during football matches: the template matching approaches seem the less appropriate. In fact, the appearance of the target changes because of the shadow effect, the light variations and partial occlusions caused by the players or the goal-post. Since the ball is not a complex target also hierarchical approaches should be avoided. So we have chosen to focus our attention on a statistical approach based on the Independent Component Analysis and Wavelet decomposition. In the follow, firstly the theoretical background of the proposed features extraction methods will be explained, and then the classification results will be exposed, after the schematic representation of the whole system architecture.

3. Mathematical background

3.1.1 Independent Component Analysis theory

A central problem in image and signal processing, as well as in neural network research and statistics, is finding a suitable representation or transformation of the observed data.

Independent component analysis (ICA) is a statistical method for transforming an observed multidimensional random vector into components that are statistically independent from each other as much as possible. If we denote by $x = (x_1, x_2, ..., x_m)^T$ a zero mean m-dimensional random variable that can be observed, and by $s = (s_1, s_2, ..., s_n)^T$ its n-dimensional transformation, then the problem is to determine a constant weight matrix W so that the linear transformation of the observed variables

$$s = W \cdot x \qquad (1)$$

produces transformed components that are statistically independent. This method is a special case of redundancy reduction. In other words we can consider the equation (1) as linear transformation of the data performed by the projection of the observed data on the rows of the matrix *W* (basis vectors). This interpretation is suitable for feature extraction and pattern recognition problems.

It is important to observe that in this projection the basis vectors (i.e. the rows of W) are not fixed a priori but are estimated starting from the data. In some way this approach seems more similar to Principal Component Analysis than to many other linear transformations like Fourier, Wavelet and Gabor where the basis vectors are independent from the data. The difference with PCA is in the way of determining the coefficients of the matrix *W*. In PCA the covariance matrix (a second order statistic) and the coefficients are evaluated imposing that the resulting s_i are not-correlated. In ICA higher order statistics are needed and the coefficients of matrix *W* are estimated (not calculated) imposing that the s_i are independent (that is a requirement more strong that not-correlated). The main problem in ICA is the estimation of the weights W. The method is based on contrast (or objective) functions that are calculated on the basis of some statistic properties of the data. The minimization or maximization of these functions and the relative adaptive change of the weights allow the final estimation of *W*. Several objective functions have been proposed for the estimation of the projection matrix *W*. Basically these functions are based on likelihood, entropy, mutual information or more frequently on the approximation of these [1,2,3,4].

In this paper, a contrast function based on minimization of mutual information and a robust scheme to perform the minimization of this function through successive estimations of projection pursuit directions have been used as proposed by Hyvarinen in [5].

To find one component we maximize the function J_G given by:

$$J_G(w) = [E\{G(w^T x)\} - E\{G(v)\}]^2 \qquad (2)$$

where *w* is a weight vector which satisfy the constrain $E\{(w^T x)^2\} = 1$, *G* is a non quadratic function and *v* is a Gaussian variable with zero mean and unit variance. Several independent components can be estimated one by one. This fixed-point algorithm and the underlying contrast functions have a number of desirable properties when compared with the other existing methods for ICA. There are two main advantages: the first is that the convergence is cubic (or at least quadratic) and not linear as with gradient descent methods; the second is that, contrary to gradient-based algorithms, no parameters have to be chosen.

3.1.2 Wavelet Theory

The one-dimensional Wavelet Transform operator $F : L^2(R) \rightarrow L^2(R)$ can be defined as follows:

$$F(f(s)) = \hat{f}(s) = \int_{-\infty}^{\infty} f(u)\psi_{s,t}(u)du \qquad (3)$$

where

$$\psi_{s,t}(u) = \frac{1}{|s|^p}\psi(\frac{u-t}{s}) \qquad (4)$$

Varying *s*, the frequencies on which the function ψ operates are changed, and varying *t*, the function ψ is moved on all the support of the function *f*.

In this work a Discrete Wavelet Transform has been used supplying a hierarchical representation of the image. The DWT is implemented with the iterative application of two filters: a low pass filter LPF (approximation) and its complementary in frequency HPF (detail filter). The mono–dimensional decomposition scheme is depicted in figure (1.a). The 2D-DWT is implemented applying first on rows and then on columns the LP HP filtering scheme, followed by a decimator of factor 2. In this way the Wavelet Transform breaks the image into four sub-sampled images (sub-images). This procedure can be iterated several times, to obtain a full depth wavelet decompositions, reapplying the same scheme only on the low pass sub-image at each step. In figure 1.b the sub-image arrangement scheme of a 3-level Wavelet transform is shown.

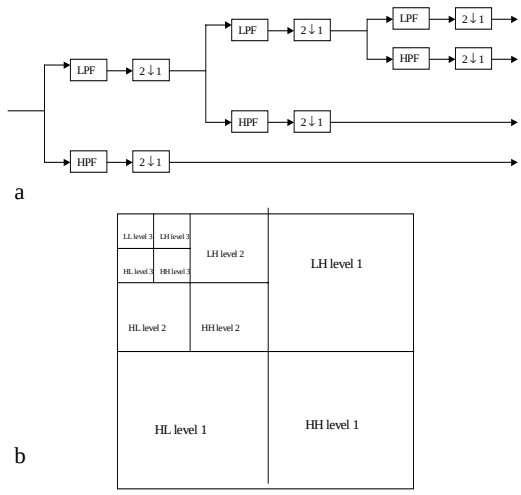

Figure 1. The decomposition of the image with a 3-level Wavelet Transform: a) 1–D decomposition scheme; b) sub–image arrangement scheme.

The capital letters in each sub-image represent the kind of filters that have been applied on the image of the previous level; the first letter is the filter that has been applied in the horizontal direction, while the second letter is the filter that has been applied in the vertical direction (H stands for an High Pass Filter L stands for a Low Pass Filter). The band LL is a coarser approximation of the original image. The band LH and HL record the changes of the image along horizontal and vertical directions. The band HH shows the high frequency components of the image. Decompositions can be iterated on the LL sub-bands. After applying a multilevel Wavelet Decomposition, an image is thus decomposed into sub-bands of different frequency components. The coefficients of the wavelet transform enclose information about the texture and the shape of the object in the image. In this way it is possible to distinguish an object in the scene from other elements that could have in common one of the two aspects. For example, in the soccer game, the head or the back of a player could have the same shape and size of the ball but it can be distinguished considering the texture information. Therefore a proper analysis of the texture information allows the classifier to distinguish them from the ball examples. As said in the previous session the limit of Wavelet decomposition is the independence between basis and data training.

In order to apply the wavelet decomposition it is necessary to choose the decomposition level and the kind of coefficients (details and/or approximations) that are more relevant for the considered problem.

Starting from the good results obtained in our previous works [6,15], in this paper the wavelet decomposition is performed with Haar family at level 4 and all the coefficients are supplied as input to neural classifier. It's important to observe that Haar basis are very simple and easy to use and that the level 4 is, according to the window size, the maximum level possible (see next session).

4. System overview

The image sequences are acquired during a soccer match by using an high frame rate (262 frames/second) camera in order to detect all the possible critical events in the scene. The ball recognition system consists of two sequential steps: the first step uses a modified version of the directional Circle Hough Transform to detect the region (25x25 pixels) of the image that is the best candidate to contain the ball. In the second step, after a proper pre-processing, the selected region is provided to a neural classifier to confirm if the ball has been correctly detected or a false positive has been found. Some expedients like background subtraction and ball tracking have been considered in order to maintain the search of the ball only in limited areas of the image. A detailed description of the system can be found in [6]. In this work the images provided to the neural classifier have been preprocessed by using the ICA transform and Wavelet Transform (WT) (see fig. 2).

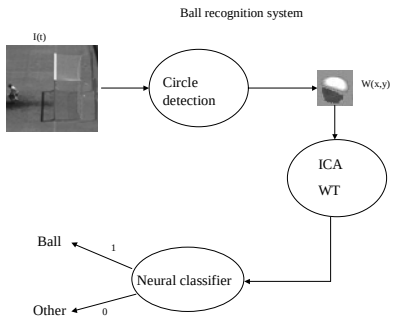

Figure 2. The Ball recognition system. I(t) is the frame acquired at the time t. W(x,y) is the widow of size 25x25 containing the ball candidate.

The training set consists of 872 examples of ball and 338 examples of non-ball. Figure 3 shows some examples of the training set. In the upper line three different examples of ball are shown; in the lower line three examples of non-ball (shoulder and calf of goal-keeper) are shown. Observing the whole training set two considerations can be done: due to the self shadow effect and varying light conditions, the positive examples of the ball can be greatly different (although the upper area of the ball maintains the same appearance); on the same time the negative examples can have an high similarity with the upper area of the ball. For these reasons the recognition process can be very hard unless a proper feature extraction is applied.

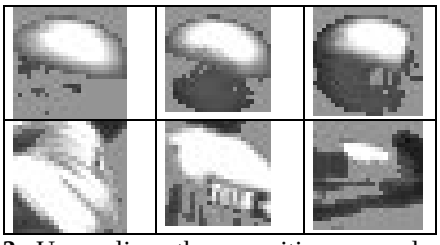

Figure 3. Upper line: three positive example of ball; lower line: three negative examples of non-ball (shoulder and calf of goal keeper)

The set of positive examples has been used to calculate the ICA basis with the FAST ICA algorithm proposed by Hyvarinen [5]. The algorithm generates automatically 625 ICA basis (in order to generate a square mixing matrix). All the training examples are projected on these basis and on the Haar Wavelet basis and the resulting coefficients are the features used to train the Back Propagation Neural Network. The tests have been done on a complex sequence of 821 frames. The complexity of the sequence derives from the presence of two players (the goal-keeper and the forward) in an action with multiple shots on goal. The table 1 resumes the ball situations in the test sequence.

Table 1. Ball presence in the test sequence

Target	Number of images
Ball	318
Non-Ball	364
Ball occluded	139

This classification has been done as follows: the ball has been considered completely visible even if a small percentage of its surface is occluded (less than the 25%); it has been considered occluded if a percentage of its surface varying between the 25 and 50% is not visible for the presence of shadows, players or goal-post; Non-Ball cases include both images where the ball is absent and images where the ball is occluded for more than the 50% of its area. In the last cases also human recognition of the ball can be difficult due to the lack of information.

The test images are projected on the same basis vectors generated during the training phase, and the coefficients are provided to the neural classifier.

The Figure 4 shows three frames of the test sequence with the ball completely visible, the partially occluded ball and completely occluded ball.

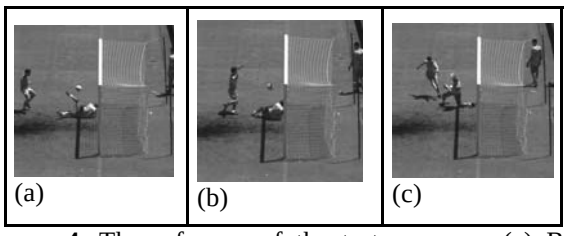

Figure 4. Three frames of the test sequence (a) Ball completely visible (b) Ball partially occluded (c) Ball completely occluded

5. Experimental Results

In this work three experiments have been carried out. The first experiment is performed with ICA pre-processing, the second one with Haar Wavelet pre-processing and the third one is a combination of the previous ones. The main aim of these experiments is to determine the best feature selection technique in order to optimize the performance of the whole system (see section 4) for ball tracking and critical event detection in soccer game.

In the first experiment the candidate image ball of size 25x25 pixels extracted from the previous detection step are pre-processed with the ICA transform. Each image, in vectorial representation, is projected on the complete set of 625 basis generated by the FASTICA algorithm[5]. The basis are generated starting from the positive examples included in the training set.

The total number of generated basis is equal to the number of elements in each vector image (25x25=625) in order to generate the square weight mixing matrix W of equation (1).

The table 2 shows the results of this first experiment. The grey cells contain the correct classification data and the white cells contain the complementary data of wrong classifications.

It should be observed that the mean percentage of correct classification in each table has been evaluated as follows:

Mean Percentage= (A+B+C) / (Number of test Images)

where A is the number of correct classifications of ball images, B is the number of correct classifications of occluded ball images and C is the number of correct classifications of non-ball images.

Table 2. Classification with ICA pre-processing

	Positive response of NN	Negative response of NN
Ball	311/318(97,78%)	7/318(2,22%)
Non Ball	5/364(1,65%)	359/364(98,35%)
Ball Occluded	121/139(87,06%)	18/139(12,94%)
Mean Percentage of correct classification		**96,34%**

Since the goal of the whole system described in session "system overview" is to develop a ball recognition system for detecting critical events, to estimate the effectiveness of the system the most important parameter is the percentage of the correct classification of Non-Ball. During a soccer match it would be really unpleasant to have false alarms of goal detected whenever a pattern

similar to ball (such as the shoulder or the shorts of a player) accidentally is found behind the door-post.
The second experiment is based on Wavelet pre-processing. Each candidate ball image is project onto the Haar basis. The projection is performed with the FAST WAVELET ALGORITHM proposed by Mallat[24]. The decomposition is stopped at level 4 and all the coefficients are then supplied as input to the neural classifier. The number of wavelet coefficients is 625 that is 1 coefficient of approximation at level 4, 8 coefficients of detail at level 4, 27 (=9*3) coefficients of detail at level 3, 108 (=36*3) coefficients of detail at level 2 and 481 (=156*3) coefficients of detail at level 1. Table 3 resumes the results.

Table 3. Classification with Haar Wavelet pre-processing

	Positive response of NN	Negative response of NN
Ball	313/318(98,42%)	5/318(1,58%)
Non Ball	3/364(0,83%)	361/364(99,17%)
Ball Occluded	128/139(92,08%)	11/139(7,92%)
Mean Percentage of correct classification		**97,68%**

Tables 2 and 3 show that with Haar Wavelet pre-processing the system works better than ICA pre-processing. Wavelet pre-processing increases both the classification percentage of ball, non-ball and ball occluded with respect ICA pre-processing. The global classification performance increase from 96,34 to 97,68 but the most important result is that the classification performance of non-ball decreases from 1,65% to 0.83 and, as said before, this is very agreeable. It's important to remember that the number of features supplied as input to classifier is 625, the same number of the experiment 1. It's possible to conclude that the multiresolution based on Haar basis decomposition allows better characterizations of the pattern than ICA basis representation. From the analysis of the non correct classifications in experiments 1 and 2, it's possible to observe that the classifier makes different mistakes on different test examples. Starting from this consideration, the experiment 3 combines ICA and Wavelet representations in order to further increase the classification performances. The pre-processing is performed both with ICA and Wavelet; the features extracted are thus 625(ICA)+625(Wavelet) =1250 and are supplied all together as in input to classifier. Table 4 shows the results of the last experiment.

Table 4. Classification with Haar Wavelet and ICA pre-processing

	Positive response of NN	Negative response of NN
Ball	314/318(98,74%)	4/318(1,26%)
Non Ball	5/364(1,37%)	359/364(98,63%)
Ball Occluded	132/139(94,96%)	7/139(5,04%)
Mean Percentage of correct classification		**98,05%**

The combination effectively increases the performances of correct classifications of ball and occluded-ball but, unfortunately, decreases the classification performances of non-ball (the most important parameter). Moreover, since the ICA and Wavelet preprocessing require long computational time and a double dimension of the input space to the neural network (1250), we can conclude that there isn't for the considered application domain an effective benefit to combine them. At this point, the choice between ICA and Wavelet preprocessing can be done considering the best trade off between two different factors: the performance and the real time constraint. The Wavelet preprocessing produces higher performance than the ICA, but on the other side it requires longer computational time since they involve many bidimensional convolutions. If some specialized hardware is available, the best choice is certainly the Wavelet preprocessing.

6. Conclusion

In this paper we have dealt with the problem of ball recognition in soccer images in order to detect critical events such as goal or off-side. Different pre-processing procedures based on ICA and Haar Wavelet have been used in order to compare the classification performances. In the pre-processing step, the test images have been projected on the ICA and Wavelet basis vectors in order to generate the coefficients provided to the classifier.
Different experiments have been carried out. The results show that the Haar Wavelet is the best way to pre-process the data because the classifier reveals higher classification performance. On the contrary, ICA reveals good general performance but, with respect to the Haar wavelet preprocessing, the classification performance decreases.
Finally we have proved that the combination of ICA and Wavelet pre-processing even if improves the correct classifications for ball and occluded ball cases, does not provide an effective benefit since the input space to the classifier becomes double, and requires longer time for computation.

7. References

[1] A. Bell and T. Sejnowski, "An information-maximization approach to blind separation and blind deconvolution", Neural Computation 7, pp. 1129-1159,1995

[2] J. Cardoso, "Infomax and maximum likelihood for source separation", IEEE Letters on Signal Processing, 4:112-114, 1997

[3] P. Comon, "Independent component Analysis-a new concept?", Signal Processing 36, pp. 287-314, 1994

[4] S.Amari, A. Cichocki and H. Yang, "A new learning algorithm for blind separation", Advances for Neural Information Processing 8, pp. 757-763, 1996

[5] A. Hyvarinen, "Fast and Robust Fixed-Point Algorithms for Independent Component Analysis", Neural Computation 11 pp. 1483-1492, 1999

[6] T. D'Orazio, M. Leo, M. Nitti, G. Cicirelli, "A real time ball recognition system for sequences of soccer images", Proceeding of 2002 International Conference On Signal Processing, Pattern

Recognition, and Applications (SPPRA,) Crete (Greece) 25- 28 June 2002
[7] U.Grenander, "General Pattern theory", Oxford University Press, 1993
[8] R. Bajcsy and S. Kovacic, "Multiresolution elastic matching Comput", Vision Graphics Image Process, vol. 46, pp 1-21, 1989
[9] K.S. Fu, "Syntactic Pattern Recognition and Application", Prentice-Hall. Englewood Cliffs, 1982
[10] T. Pavlidis, "Structural Pattern Recognition", Springer-Verlag, New York, 1977
[11] C. Papageorgiou, M.Oren, T. Poggio, "A general framework for object detection", Proc. of International Conference for Computer Vision, Bombay, India, January 4-7 1998
[12] H. Rowley, S. Baluja, T. Khanade, "Neural network-based face detector", IEEE Trans. On pattern analysis and machine intelligence, vol. 20, No.1, (1998), pp.23-38
[13] M. Jones, T. Poggio, "Made-based matching by linear combination of prototype", Proceedings of the 1997 Image Understanding Workshop**,** New Orleans, LA, pp.1357-1365, 1997
[14] A. Mohan, C. Papageorgoiu, T. Poggio, "Example-based object detection in images by component", IEEE Trans. On pattern analysuis and machine intelligence, vol. 23, No 4, (2001), pp.349-361
[15] T. D'Orazio, M. Leo, M. Nitti, A. Distante, "Ball recognition in real sequence of soccer images with different light condition", Proceeding of IEEE Conference on System, Cybernetics and Informatics, Orlando, July 2002
[16] A. Hyvarinen, "Sparse code shrinkage: denoising of non-gaussian data by maximum likelihood estimation", Neural Coputation, 11 pp.1739-1769, 1999
[17] C. Jutten, J. Herrault, "Blind separation of sources part1: an adaptive algorithm based on neuromimetic architecture", Signal Processing, 24 pp.1-10,1991
[18] Anthony J. Bell, Terrence J. Sejnowski, "The Independent Components of natural scenes are edge filters", Advances in Neural Information Processing Systems, 9, pp. 831-837, 1996.
[19] K. Baek, Bruce Draper, J. R. Beveridge, K. She, "PCA vs. ICA: a comparison on the FERET data set", Joint Conference on Information Sciences (JCIS '02), Durham, North Carolina, pp. 824-827, March 2002.
[20] M. Bressan, David Guillamet, Jordi Vitrià, "Using an ICA representation of high dimensional data for object recognition and classification", Pattern Recognition , 36, 691-701, 2003
[21] C. Papageorgiou, T. Evgeniou, T. Poggio, "A trainable Pedestrian Detection System", : Proceedings of Intelligent Vehicles, Stuttgart, Germany, pp. 241-246, 1998
[22] G. Chen, T.D. Bui, "Invariant Fourier-Wavelet descriptor for pattern recognition", Pattern Recognition 32 (1999) pp. 1083-1088
[23] M.I. Khalil, M.M. Bayoumi, "Invariant 2D Object Recognition Using the Wavelet Modulus Maxima", Pattern Recognition Letters 21 (2000), pp. 863-872
[24] S. Mallat, "A Wavelet Tour of Signal Processing", Academic Press, 1999
[25] M. Oren, C. Papageorgiou, P. Sinha, E. Osuna, T. Poggio, "Pedestrian Detection Using Wavelet Templates", proc. of Computer Vision and Pattern Recognition CVPR98, Santa Barbara, CA , June 23-25, 1998

Marco Leo was born in Gallipoli -Lecce- (Italy) in 1974 and he received a degree in Computer Science Engineering from the University of Lecce in 2001. Since then, he is a researcher at the Italian National Research Council (C.N.R.), Institute of Intelligent Systems for Automation (ISSIA) in Bari (Italy). His research interests are in the area of image and signal processing, neural networks and pattern recognition

Tiziana D'Orazio received the degree in Computer Science from University of Bari in 1988. Since 1989 she is a researcher at the Institute for Signal and Image Processing of the Italian National Research Council (C.N.R.) in Bari (Italy). Her current research interests are in the fields of feature extraction, reinforcement learning, autonomous robots, behavior coordination**.**

Paolo Spagnolo was born in Maglie -Lecce- (Italy) in 1975 and he received a degree in Computer Science Engineering from the University of Lecce in 2002. Since then, he is a collaborator of research at the Italian National Research Council (C.N.R.), Institute of Study on Intelligent Systems for Automation (ISSIA) in Bari (Italy). His research interests are in the area of image processing, motion detection and pattern recognition.

Arcangelo Distante received the degree in Computer Science from the University of Bari (Italy) in 1976. He joined the National Nuclear Physics Institute until 1983 where he worked on various theoretical and computation aspects of 3D reconstruction and pattern recognition of nuclear events. Since 1984 he has been working with the Institute for Signal and Image Processing (IESI) of Italian National Research Council (CNR). Currently he is the coordinator of the Robot Vision Group and the Director of the Institute of Intelligent System for Automation (ISSIA - CNR). In 1996 he joined the University of Lecce where he is associate professor in Theory and Practice of Image Processing at the Faculty of Engineering. His current research deals with computer vision, pattern recognition, machine learning, neural computation, robot navigation and architectures for computer vision. Dr. Arcangelo DISTANTE is a member of IAPR and SPIE.